Network Topology:

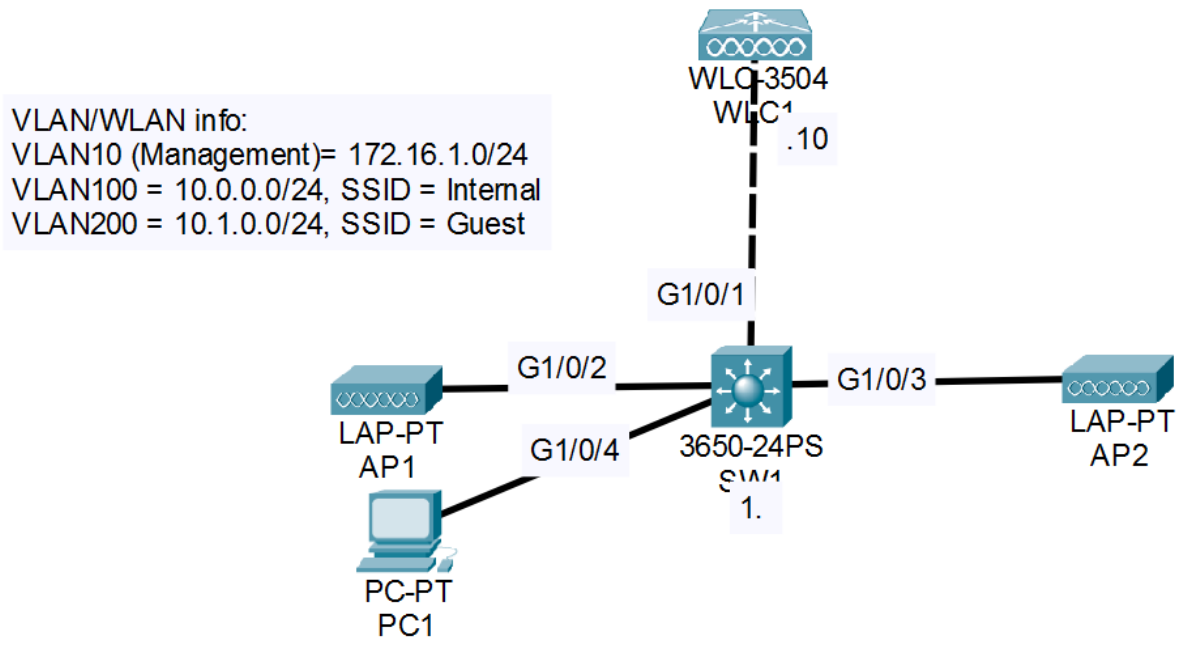

Instructions and actions –

1. Use the web browser on PC1 to access the GUI of WLC1.
   Username: admin
   Password: Cisco123

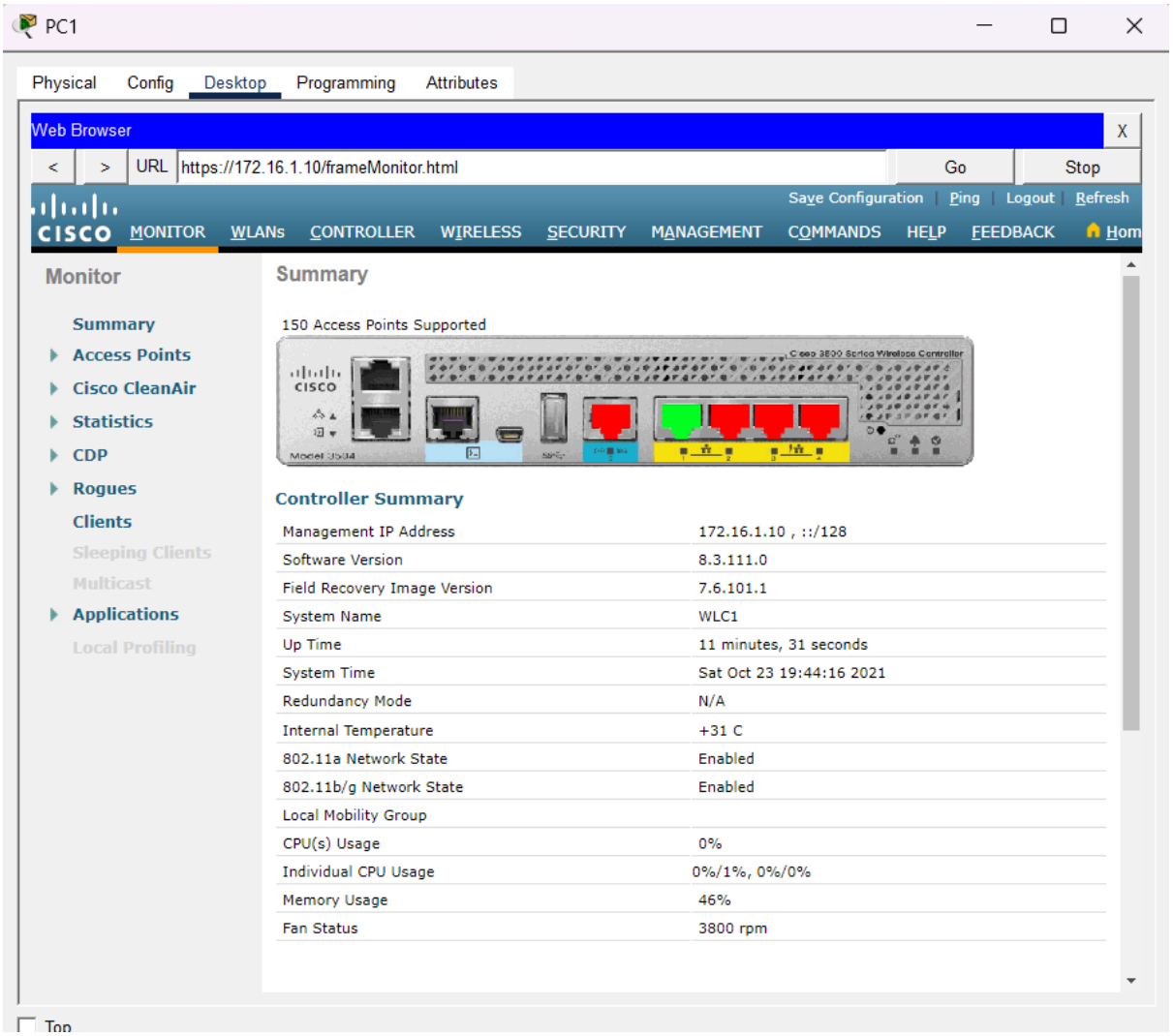

2. Configure dynamic interfaces for the Internal and Guest WLANs

Internal configuration:

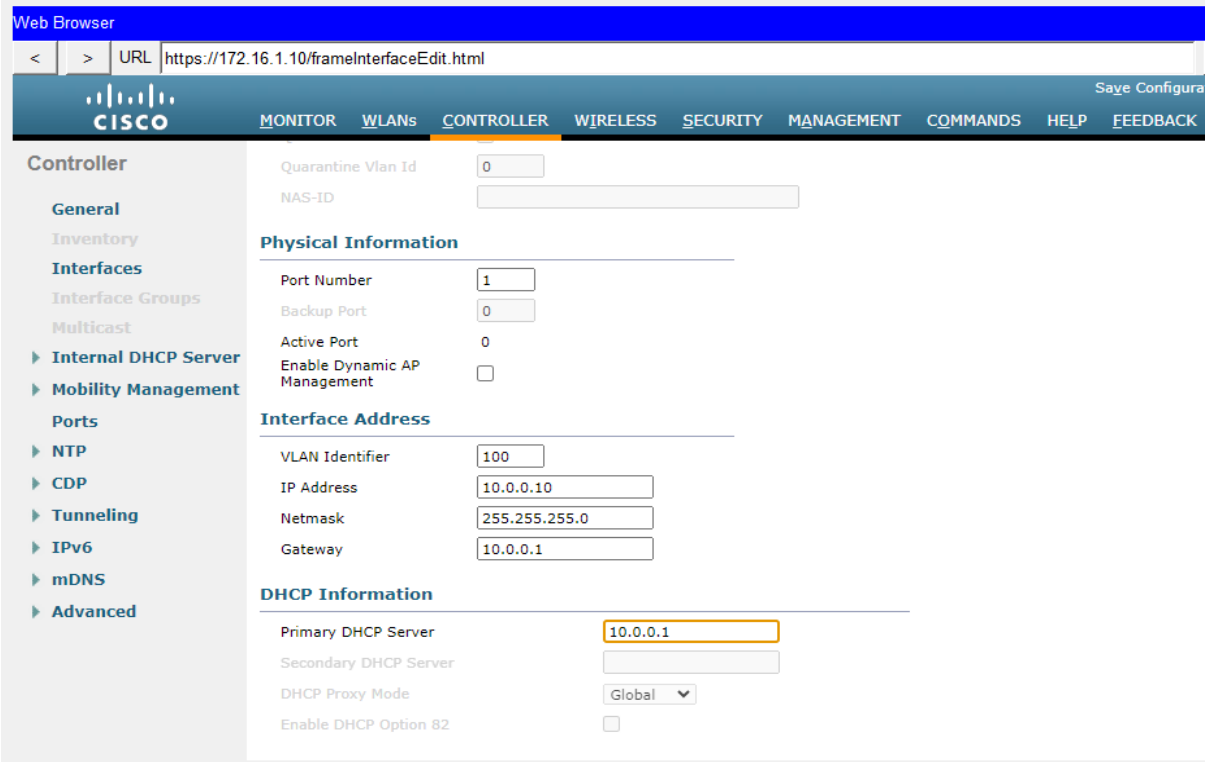

Guest configuration:

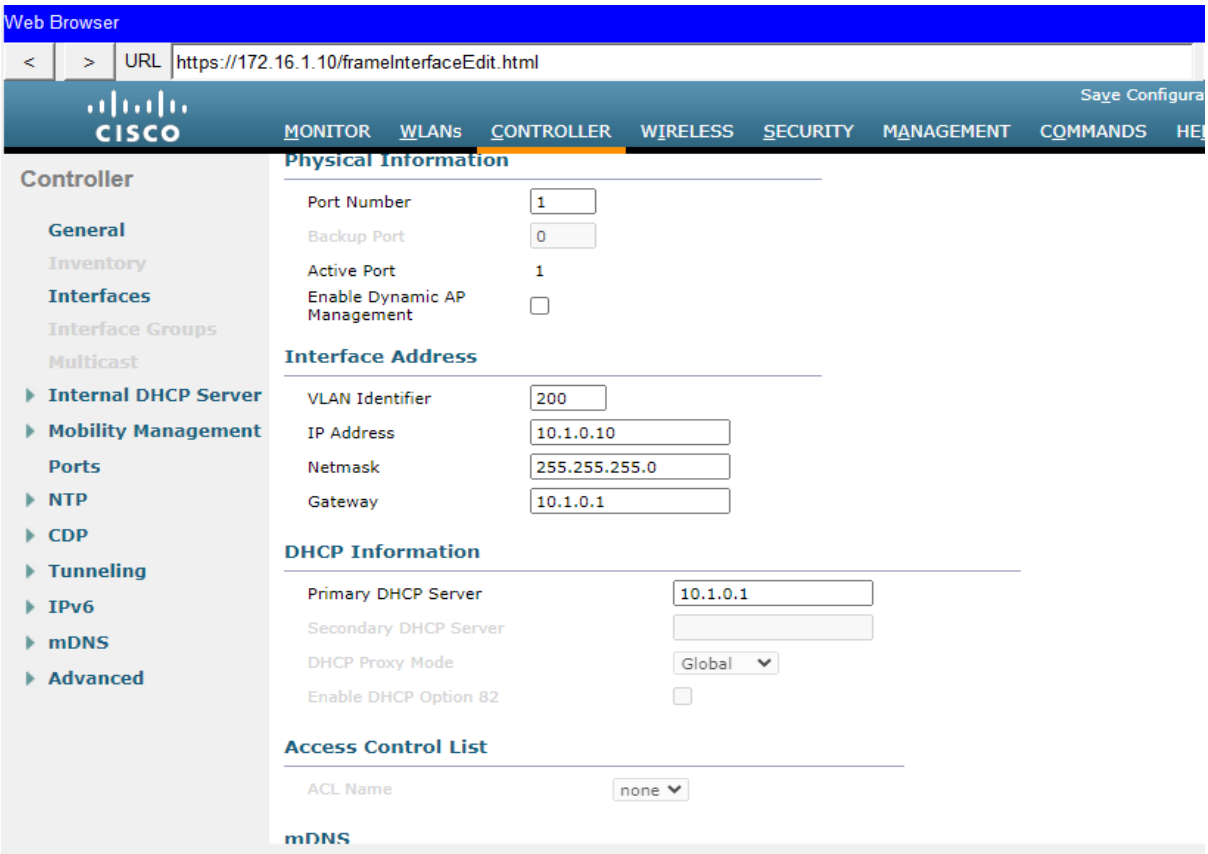

We can see both:

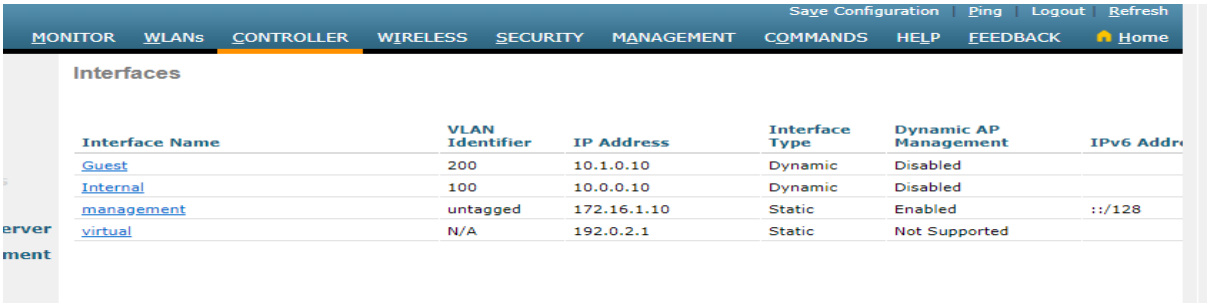

3. Create the Internal and Guest WLANs using WPA2+PSK.

Internal Configurations:

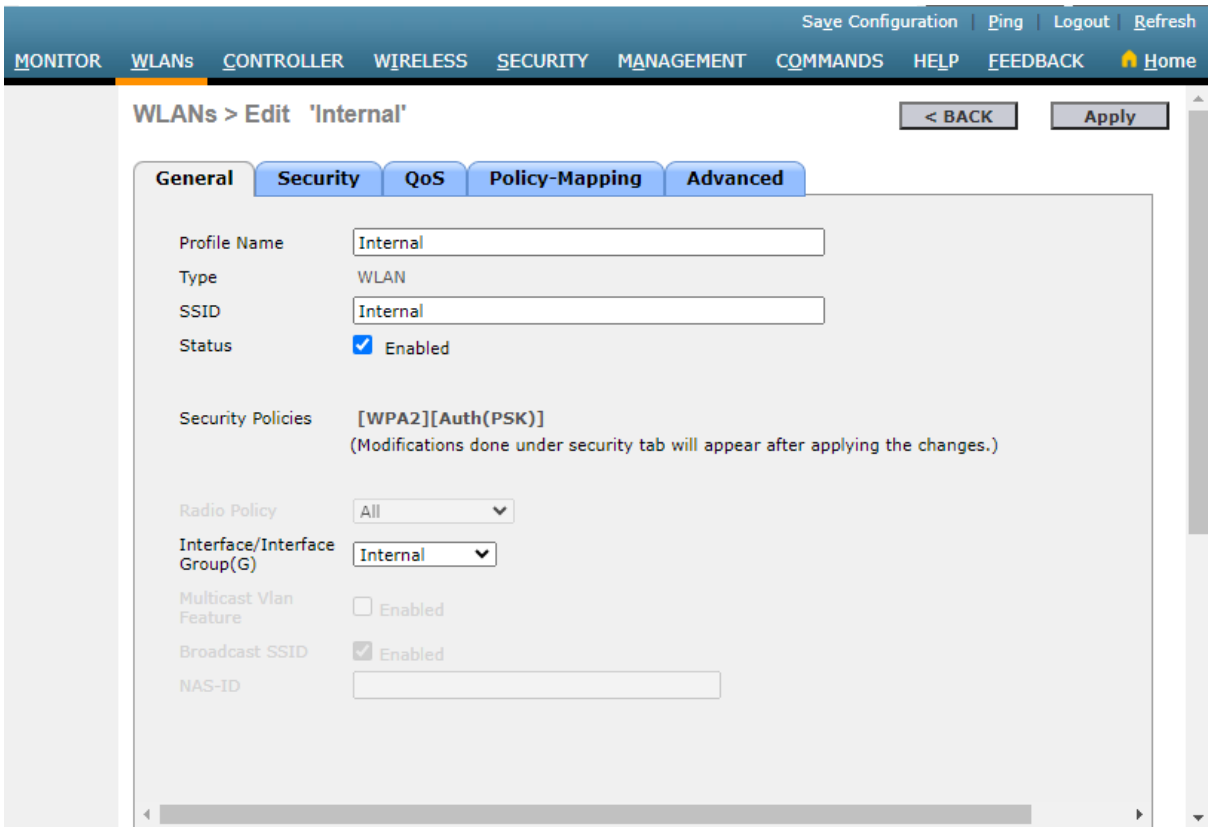

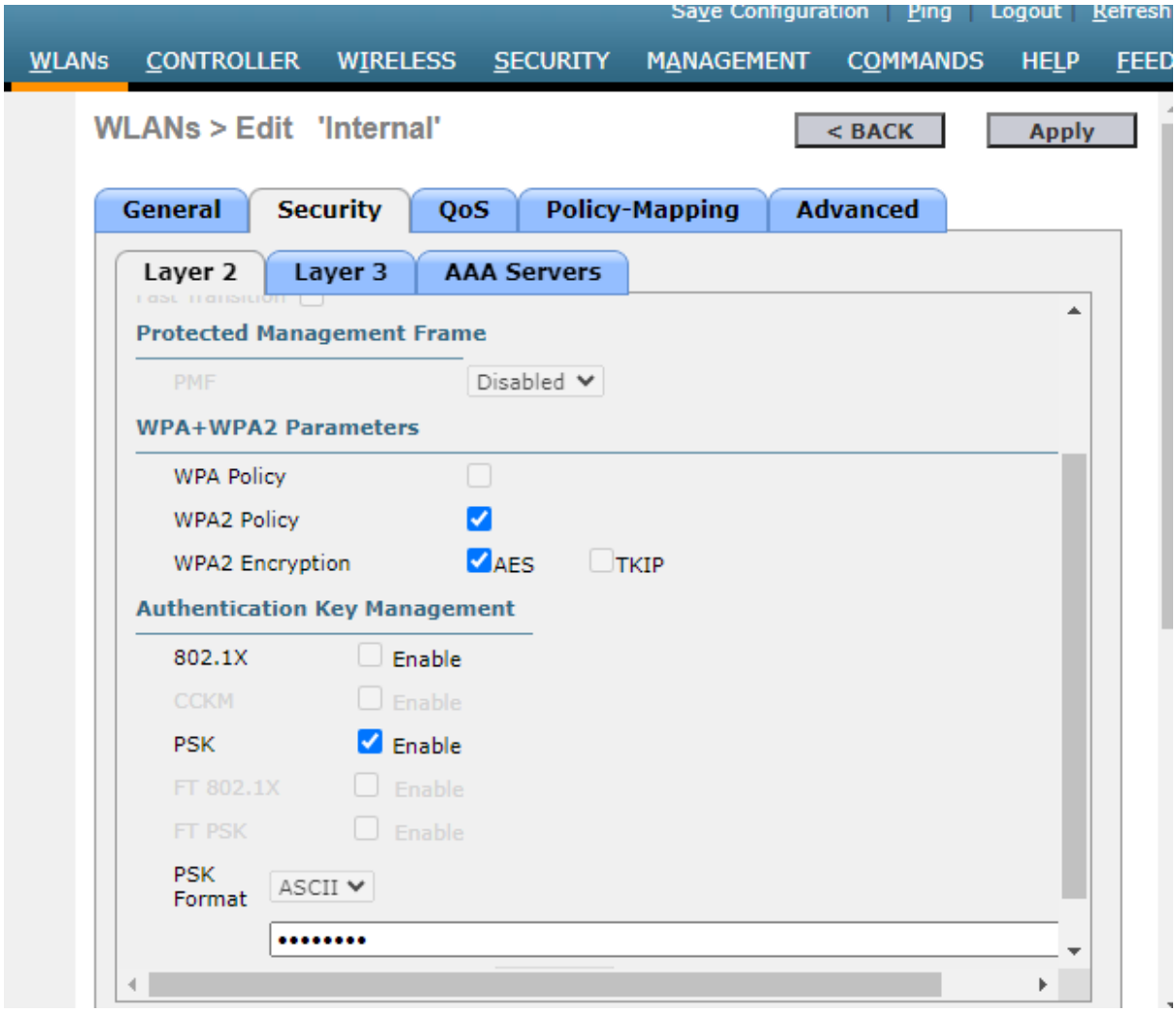

Guest Configurations:

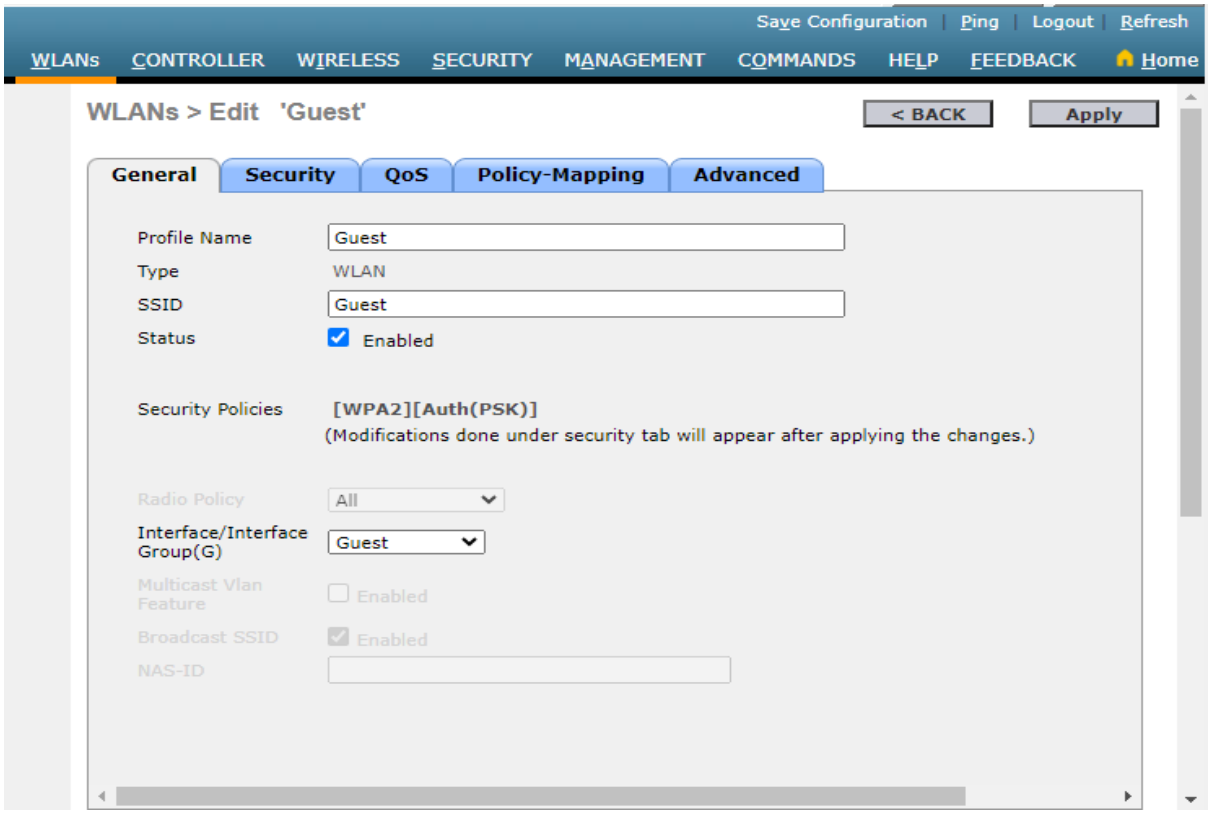

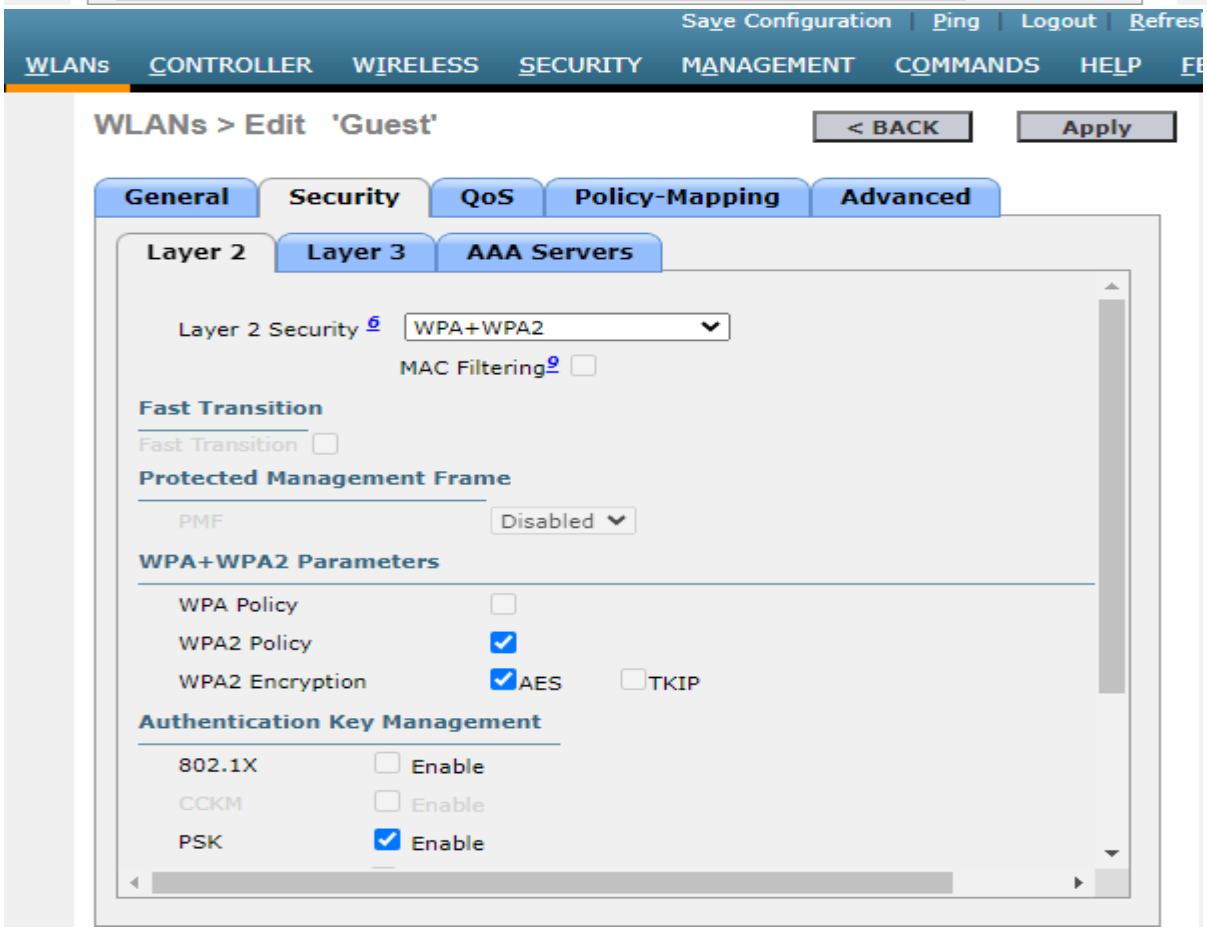

We can see both:

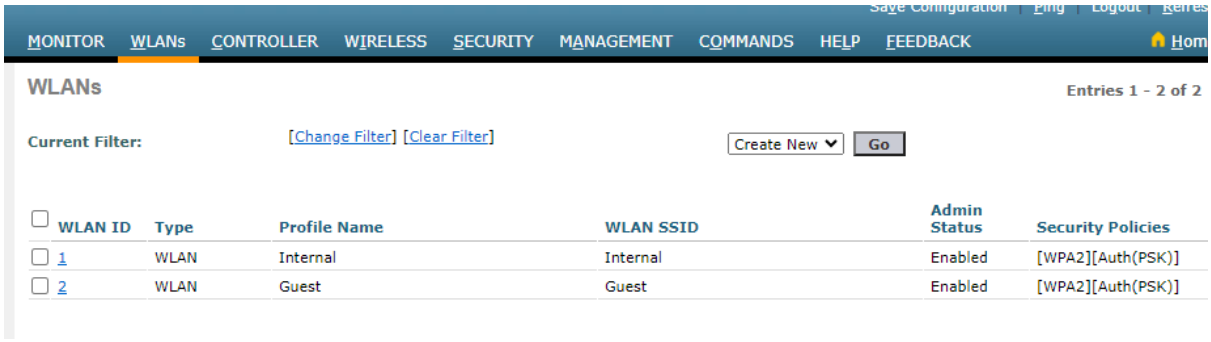

4. Add a wireless client to the network and associate it with an AP. Added a smartphone and entered the SSID and password in it, like we do when connecting to a home router.

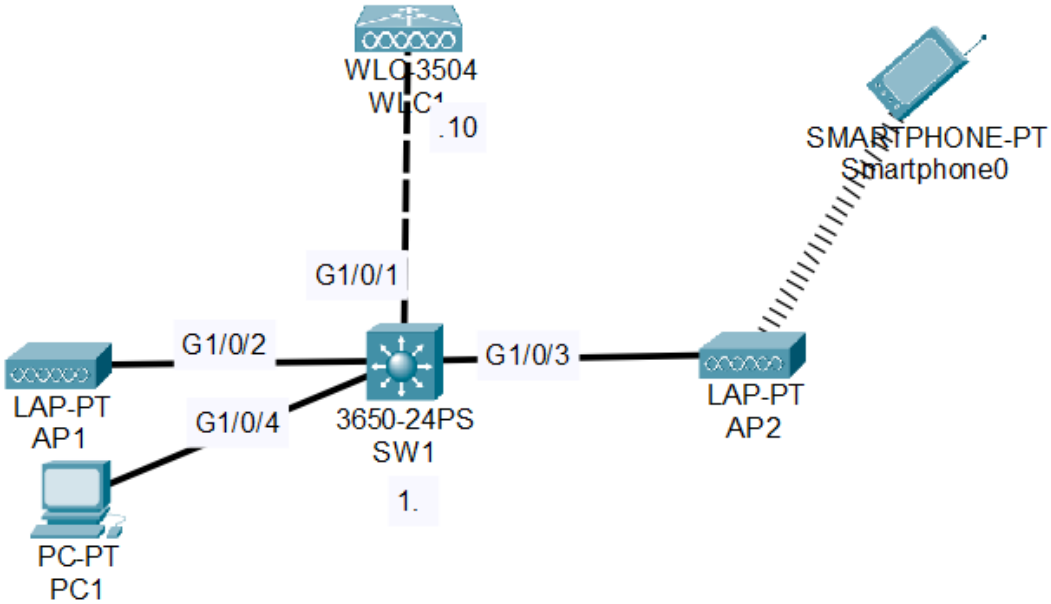

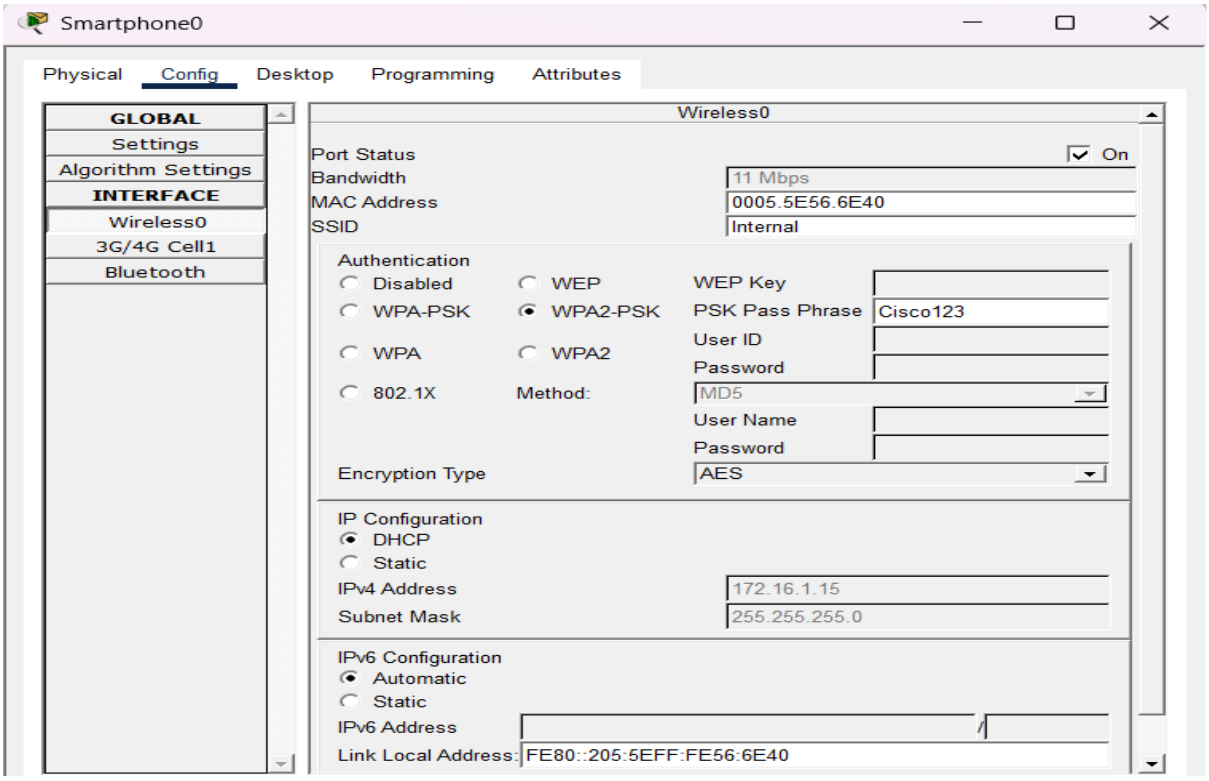

This is how wireless technology works. There are CAPWAP connections between both Access Points and the WLC for data transfer, and the WLCs are connected to a wired network.